La Escandella
ROOFING THE WORLD

MEDITERRANEAN
La Escandella

# TG Data Sheet

| | |
|---|---|
| Manufacturer: | Cerámica La Escandella S.A. |
| Production site: | Agost (Alicante) - Spain |
| Brand name: | Mixed S Large Roof Tile |

| | TG |
|---|---|
| Dimensions* | **A** 470 mm / 18.5”<br>**B** 286 mm / 11.26”<br>**C** 75 mm / 2.95” |
| Longitudinal fit** | 396 mm (+7; -4 mm) / 15.59” (+0.27”; -0.16”) |
| Transversal fit** | 230 mm (±3 mm) / 9.05” (±0.11”) |
| Pieces/m$^2$ - Pieces/sq | 10,5 - 97 |
| Weight piece | 3,85 kg / 8.49 lbs |
| Units per pallet | 180 / 240 |
| Weight per pallet | 693 kg (1,528 lbs) / 924 kg (2,037 lbs) |

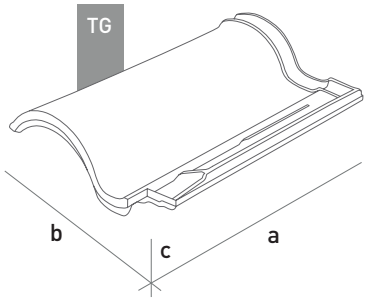


*The tile dimensions indicated in this chart allow a tolerance of approximately +/-2%
**Theoretic value: this should be re-calculated on site with the tiles that are to be used.

| | | |
|---|---|---|
| Structural characteristics: | UNE EN 1304 | ≤ 2,5 |
| Camber/Twist: | UNE EN 1024 | L > 300mm ; ≤ 1,5 |
| Impermeability (cm$^3$ / cm$^2$ * day): | UNE EN 539-1 | Mean value ≤ 0,5 ; Individual value ≤ 0,6 |
| Flexural strenght: | UNE EN 538 | ≥ 1200 |
| Frost resistance: | UNE EN 539-2 | ≥ 150 |
| Fire reaction perfomance: | UNE EN 13501-1 | A1 |
| External fire perfomance: | UNE EN 13501-5 | $B_{roof}$ |



**Additional information**

| | |
|---|---|
| Unitary mass: | 3850 gr |
| Roof tiles number/m$^2$: | 10,5 |
| Surface finish: | Surface decoration with coloured engobes |
| Mass colouring: | No |
| Fixing types: | Nib, nail pre-fixing. |

GUARANTEE 35 YEARS La Escandella
Low pitch roofs La Escandella
AENOR
NF FP
UNE EN 1304 According to European standard
EN 539-2 Test of frost resistance
EN 539-1 Impermeability
EN 538 Flexural strength test
EN 1024 Geometric characteristics