La Escandella
ROOFING THE WORLD

MEDITERRANEAN
La Escandella

TA Data Sheet

Manufacturer:	Cerámica La Escandella S.A.
Production site:	Agost (Alicante) - Spain
Brand name:	Versatile Roof Tile

	TA
Dimensions*	**A** 474 mm
	B 289 mm
	C 78 mm
Longitudinal fit**	410 mm (-20 mm)
Transversal fit**	236 mm (-8, +7 mm)
Pieces/m^2 - Pieces/sq	10
Weight piece	3,75kg
Units per pallet	210
Weight per pallet	788 kg

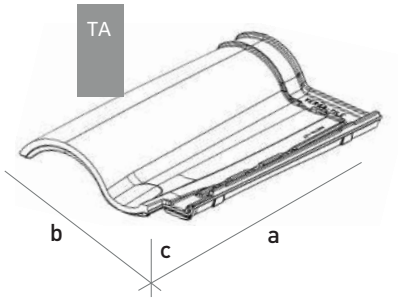

*The tile dimensions indicated in this chart allow a tolerance of approximately +/-2%
**Theoretic value: this should be re-calculated on site with the tiles that are to be used.

Structural characteristics:	UNE EN 1304 UNE ISO 2859-1	LCA 2,5
Camber/Twist:	UNE EN 1024	L > 300mm ; ≤ 1,5
Impermeability (cm^3 / cm^2 * day):	UNE EN 539-1	Mean value ≤ 0,5 ; Individual value ≤ 0,6
Flexural strenght:	UNE EN 538	≥ 1200
Frost resistance:	UNE EN 539-2	≥ 150
Fire reaction perfomance:	UNE EN 13501-1	A1
External fire perfomance:	UNE EN 13501-5	B_{roof}



Additional information

Unitary mass:	3750 gr
Roof tiles number/m^2:	10
Surface finish:	Surface decoration with coloured engobes
Mass colouring:	As required
Fixing types:	Nib, nail pre-fixing.

GUARANTEE 35 YEARS La Escandella

CE

UNE EN 1304 According to European standard

EN 539-2 Test of frost resistance

EN 539-1 Impermeability

EN 538 Flexural strength test

EN 1024 Geometric characteristics